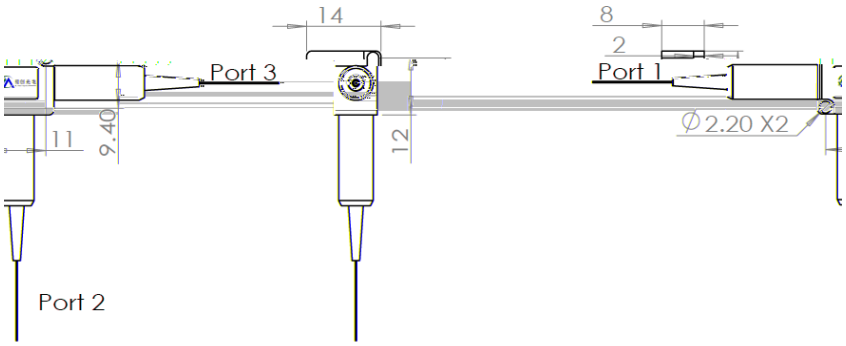
14
8
2
Port 3
Port 1
11
9.40
12
∅2.20 X2
Port 2

MCHPB S/C							