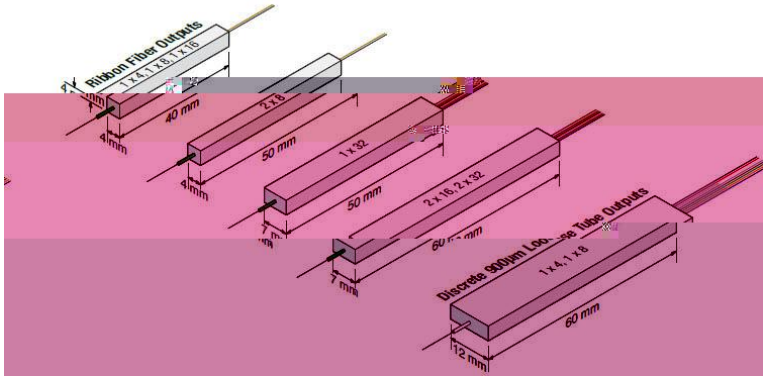
Ribbon Fiber Outputs
1 X 4, 1 X 8, 1 X 16
40 mm
4 mm
2 X 8
50 mm
4 mm
1 X 32
50 mm
7 mm
2 x 16, 2 x 32
7 mm
Discrete 900µm Loose Tube Outputs
1 X 4, 1 X 8
60 mm
12 mm

MCPLC